Development and Field Test of a Demand Guided Coordination of Heating and Ventilation Control Systems in Reconstructed Blocks of Flats

GUNTER LAUCKNER, *Group Manager*, **JÖRN KUNZE**, *Scientific Co-Worker,*
MATTHIAS KLINGNER, *Head of Department, Fraunhofer-Institute for Transportation and Infrastructure Systems, Dresden, Germany*
MANFRED RIEDEL, *Director,*
SABINE BENTSCHEFF, *Scientific Co-Worker, Dr. Riedel Automatisierungstechnik GmbH, Berlin, Germany*
EHRENFRIED HEINZ, *Deputy Head of Department,*
DIRK MARKFORT, *Scientific Co-Worker, Institute for Rehabilitation and Modernization of Buildings IEMB e.V., Reg. Assoc. at the TU Berlin, Germany*

ABSTRACT

The redevelopment of old buildings tries to meet the demand for reduced energy consumption and capital costs. Thermally insulated building enclosures, windows and doors with almost air-tight joints have led to a substantially reduced natural air circulation. Only controlled ventilation techniques are able to maintain the necessary air change rate in view of hygiene, health and building durability considerations. The compromise between comfort demands, necessary air exchange and low heating losses can be achieved by intelligent coordination of the thermodynamical and air ventilation processes. The paper deals with the development and test of a new user demand guided field bus based coordination of single room control and air change rate control for a commercial building automation system. A field test was organized for a reconstructed block of 65 flats. It will be shown that the control strategy ensures the necessary air exchange in an energy-efficient manner.

1 INTRODUCTION

Typical blocks of flats, especially found to a great extend in the newly-formed German states require a special solution for reconstruction. A proper solution leads to saving of energy and can be used in many cases. Planned ventilation thermal losses are almost equal to transmission thermal losses after replacing windows and fitting thermal insulation to the building walls and ceiling. Thus ventilation offers a great energy saving potential. But with the reduced ventilation air quality problems arise. The concentration of carbon dioxide, unpleasant odours and water vapour may become much higher than before. The higher amount of water vapour may even lead to mould. The indoor air quality can be strongly increased without considerable energy losses by applying an occupant independent air ventilation control in

coordination with the heating control system. Thus, the compliance to hygiene, health and building durability standards can be guaranteed.

The design of the building ventilation equipment aims to meet the required air change rate in each flat. From the variety of ventilation systems a fan assisted exhaust ventilation with a central fan and decentralized supply air terminal devices has been chosen. The results of a test project in (Heinz 1995) show a broad acceptance, stable operation and an air change rate within the limits. In order to suppress meteorological and occupant caused disturbances a decentralized stabilization of the total air flow rate is necessary. The adjustment of the air flow rate controlling devices to the entire system requires the analysis and simulation of relevant processes. Chapter 3 shows the building behaviour in continuation of (Knabe *et al.* 1997) as Matlab simulation results (Matlab 2000).

Chapter 4 introduces a new demand guided air volume flow rate control of the central fan in comparison with a conventional pressure control. An adaptive air volume flow rate control determines the ventilation demand of the flats and adapts automatically to the time-variant non-linear system characteristics. The simulation results were verified at a laboratory test plant. The planned air flow rate was matched with respect to the desired basic and demand air ventilation as an essential prerequisite for air ventilation control introduced in (Klingner *et al.* 1999) and realized for a commercial building automation system (chapter 6). The entire system has been tested for 2 years now in a typical block of flats with 65 units as described in chapter 2. There are extended measured data available analysed in chapter 7 with respect to heat energy demand and air change rate.

2 VENTILATION SYSTEM

Actions for thermal insulation of the building enclosure, fitting of new windows and doors, renewal of the building heat transfer stations and the two pipe heating systems are not within the scope of this paper. The test building consists of four front doors, 65 units with 1, 2, 3 or 5 rooms each and 12 fan assisted exhaust ventilation systems.

The following basic research was done at a fan assisted exhaust ventilation system with connected windowless bathrooms and kitchens (1st floor: one 1-room-unit, 2nd – 6th floor: five 3-room-units) as shown in the example of Figure 1 (Heinz 2000). A speed controlled fan generates a subpressure within the air shaft and the flats for coming in of fresh air through planned outdoor air terminal devices (OATD) and air leakages in the building enclosure. Haphazard ventilation superimposes the fan assisted forced ventilation as a disturbance and causes additional air flows through the air shaft, air leakages or open windows either into or out of the building.

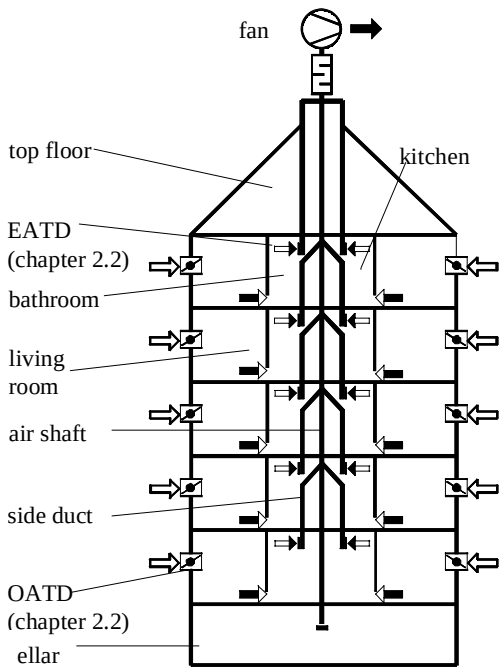

Figure 1 - Example for a Central Fan Assisted Exhaust Ventilation System with a Double Air Shaft

2.1 Air Tightness of the Building Enclosure

For energy conservation and building durability reasons a building enclosure should be as airtight as possible (WSchV 1995 and EnEV 1999). In order to avoid the spread of exhaust air with unpleasant odours and water vapour from one flat to another, the inner building structure should be those that there is no direct or indirect flow of air between the flats. Air terminal devices are necessary to comply with the demanded minimum air change rate and must be planned carefully. The proof of air tightness with or without closed air terminal devices is usually done in North America as well as in some European Countries with the Minneapolis-Blower-Door test. Adequate requirements apply for the air tightness of air shafts.

As an assess value the leakage rate per unit volume at 50 Pa n_{50} (EN 13 829) is used. A range $n_{50} \leq 1{,}5\ h^{-1}$ is demanded for buildings with fan assisted air ventilation. Furthermore, the floor area related value $q_{50} \leq 3{,}75\ (m^3/h)/m^2$ is given to ensure energy conservation and building durability considerations. However, air openings in the building enclosure do not necessarily lead to a proper working ventilation system. The necessary air change rate according to German Law can only be achieved with additional OATDs. Special OATDs are fitted directly above the radiator within the window frame and limits the incoming air flow for pressure differences above $\Delta p_{limit} \approx 20$ Pa e.g. (Figure 2). The results of a Blower-Door test for one flat show unplanned air leakages within the installation area. Further internal air leaks are caused by air flow from adjacent flats and the staircase (Reichel and Richter 1998). These leaks are so small, they are almost unmeasurable, though. Closed flaps leads to $n_{50} \approx 1{,}1h^{-1}$,a considerable high air tightness of the enclosure construction.

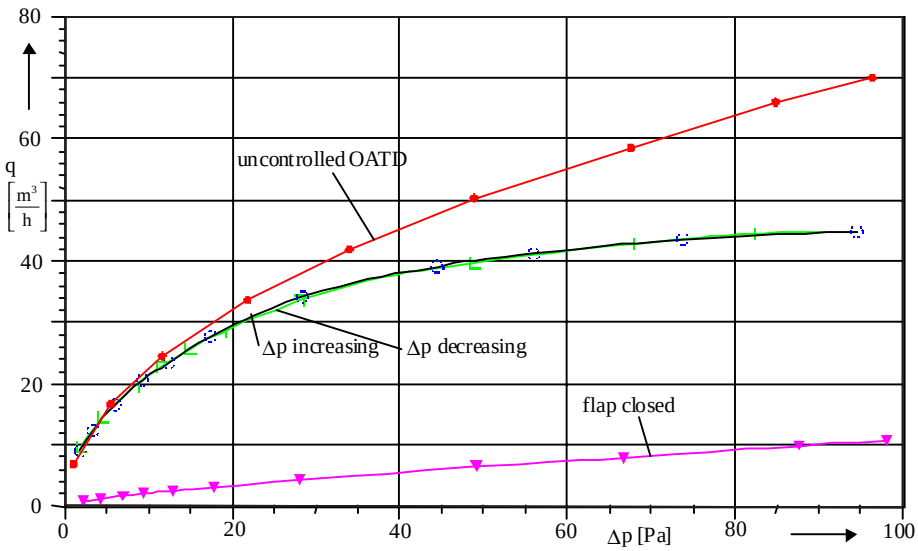

Figure 2 - Windward Self-Controlling OATD, Open and Closed, without Considering the Influence of Window Joints, q = f(Δp)

2.2 Air Terminal Devices

The deviation from the planned mass air flow rate due to disturbances are reduced to a minimum by volume flow rate limiting commercial exhaust air terminal devices **(**EATD). It is desirable to use buoyancy and wind forces for enhancing the effect of the ventilation fan and reducing fan energy consumption. The volume flow rate controller works without auxiliary energy. A pre-strained rubber bellows narrows the effective air flow opening diameter if the pressure is 50 Pa or greater and activates the control mechanism. The characteristic curve q = f(Δp) (Figure 3) is factory adjusted. The outlet can adopt 2 states, one for basic ventilation

and one for demand ventilation. The demand ventilation is user activated by a field bus connected keyboard with the option for 15, 30, 45 or 60 minutes demand ventilation. Demand ventilation can be stopped by the occupant at any time.

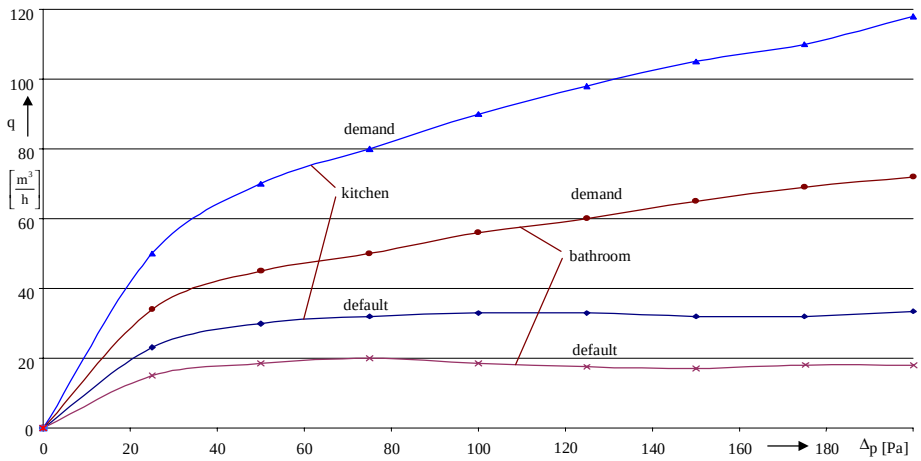

Figure 3 - Air Outlets for Basic and Demand Ventilation, q = f(Δp)

The joint leakage coefficient of doors a_d should be greater than 4 $m^3/(h \cdot m \cdot Pa^{2/3})$ (Reichel and Richter 1996) in order to ensure a proper air flow within the flat. If this prerequisite is not applied, the supply of fresh air will become insufficient since the change of air by the ventilation system causes not only a flow of outside air into the building but also a considerable air flow through inner leakages. Therefore, doors are usually equipped with grids (Heinz 2000).

2.3 Adjustment of the Ventilation System

For a proper adjustment of the planned air change rate R certain values depending on the type of flat and number of occupants (DIN 1946-6) and considering windowless kitchens and bathrooms (BRL 1988) have to be matched. A value $R \approx 0{,}5\ h^{-1}$ is recommended in order to avoid damage by water vapour, to reduce unpleasant odours and to reduce the spread of micro-organisms. The value may vary in given limits for various occupant habits. The developed control strategy (chapter 6) keeps a given set point for the air change rate R_{ref} according to $R_{basic} \leq R_{ref} \leq R_{demand}$. The EATDs are dimensioned in such a way that if both kitchen and bathroom EATDs are in basic ventilation mode a $R_{basic} \approx 0{,}3\ h^{-1}$ is ensured, while for both EATDs in demand mode a $R_{demand} \approx 0{,}8\ h^{-1}$ applies for the entire flat.

3 MODEL OF THE VENTILATION PROCESS

The given process consists of many air flow zones, numerous ventilation elements mostly with high non-linear behaviour and control equipment as well as of inner and outer disturbances (Richter 1983, Feustel 1984, Dietze 1987, Etheridge and Sandberg 1996, Recknagel *et al.* 2000). While neglecting non-stationary part models for wind turbulences or mechanical induced vibrations (Etheridge and Sandberg 1996), the dynamic of the controlled fan is included into the model in order to examine different control strategies.

3.1 Balance Equations

A part of the electric analogous circuit of the ventilation system for the chosen building shows Figure 4. According to Kirchhoff's laws of networks there are f equations necessary for the mass flow rate junctions and m equations for pressure differences

$$f_\upsilon = \sum_{i=1}^{L_\upsilon} \dot{m}_{\upsilon i} = 0; \upsilon = 1,...,f \tag{3.1}$$

$$g_\mu = \sum_{i=1}^{M_\mu} \Delta p_{\mu i} = 0; \mu = 1,...,m\,. \tag{3.2}$$

The same equations using vectors give

$$\underline{h}^T(\underline{x}) = \begin{pmatrix} \cdots & f_\upsilon & \cdots & g_\mu & \cdots \end{pmatrix}^T = \underline{0}^T; \upsilon = 1,...,f; \mu = 1,...,m \text{ with} \tag{3.3}$$

$$\underline{x}^T = \begin{pmatrix} \cdots & \dot{m}_{\upsilon i} & \cdots \end{pmatrix}^T; \upsilon = 1,...,f; i = 1,...,L_\upsilon\,. \tag{3.4}$$

Equation (3.3) represents a minimization problem

$$\min_{\underline{x}} \left(\underline{h}(\underline{x})\right). \tag{3.5}$$

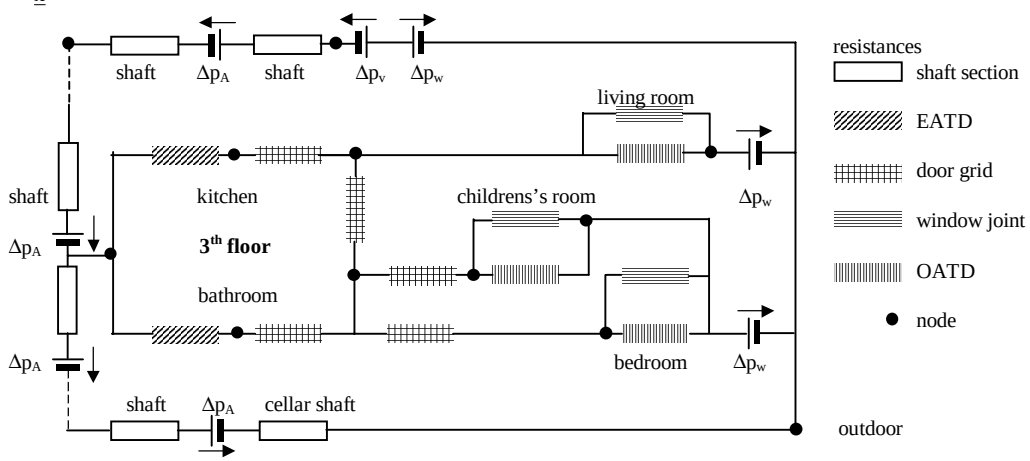

Figure 4 - Part of the Electric Analogous Circuit

The solution is a vector, which can be found with the Matlab-Optimization Toolbox. Equation (3.2) contains numerous inputs, disturbances caused by natural sources and parameters. Those influence factors must be described now for individual ventilation elements with respect to the dependence of the pressure difference on mass flow rate. It is assumed that air behaves according to the ideal gas laws of Boyle and Charles (Dittmann 1995).

3.2 Air Shaft Elements, Air Terminal Devices and Joints

The empirical, simplified approach for calculating the pressure difference within the air shaft in reference to the mass air flow rate leads to the quadratic equation

$$\Delta p_S = K \cdot \dot{m}^2\,. \tag{3.6}$$

The resistance K of an air shaft section is determined by the geometric dimensions, a form coefficient and the coefficient of friction. Furthermore, for calculating K either iterative procedures are needed (Recknagel *et al.* 2000) or polynomial approaches must be applied .

In order to determine stationary air flows through air outlets the manufacturer given characteristic curves (Figures 2 and 3) must be converted to mass flow rates, inverted and approximated with a n-th degree polynomial

$$\Delta p_O = a_0 + a_1 \cdot \dot{m} + \ldots + a_n \cdot \dot{m}^n\,. \tag{3.7}$$

A qualified compromise between model accuracy and equation simplicity is found for n < 9.

The outside mass flow rate is a sum of the planned air inlets and the existing unplanned air leakages. The air flow for window and door joints can be reduced to

$$q_J = a_J \cdot L_J \cdot \Delta p^z \tag{3.8}$$

with a joint leakage coefficient a_J and a joint length L_J (Dietze 1987). The grid in the door is considered as a joint with z=0.5 for turbulent air flows. If the door is closed, the unplanned joint of the door can be neglected.

3.3 Natural Sources

$$\Delta p_w = \frac{\rho \cdot c_p}{2} \cdot v_0^{\,2} \;;\; v = v' \cdot \left(\frac{h}{h'} \right)^{n_W} \tag{3.9}$$

describes the pressure profile for the building enclosure determined by the building enclosure construction and the nature of the prevailing undisturbed wind v_0. The influence of the ground roughness can be seen in the statistical mean wind velocity v with altitude h, wind profile exponent n_W, mean wind velocity v' corresponding to relative altitude h' and the c_P-value.

But since the ventilation model should consider the thermal buoyancy as well

$$\Delta p_A = g \cdot \Delta\rho \cdot \Delta h \tag{3.10}$$

must be calculated with the density difference $\Delta\rho$ and the altitude difference Δh for an air volume section.

3.4 Fan

The model for the stationary behaviour of a radial roof mounted exhaust fan can be approximated with the normalized overall pressure versus volume flow rate characteristic curve and the efficiency model describing the energy demand, depending on the fan rotation speed. The total pressure difference for the fan

$$\Delta p_v = \Delta p_{st,s} + \Delta p_{dyn,o} \tag{3.11}$$

is calculated using the static pressure difference within the air shaft $\Delta p_{st,s}$ and the dynamic pressure difference outside the air shaft $\Delta p_{dyn,o}$ depends on the air velocity. In order to describe the fan behaviour for various rotation speed n the characteristic curve must be normalized for the nominal value n_0 (Recknagel *et al.* 2000). Therefore, the delivery and the pressure quantities

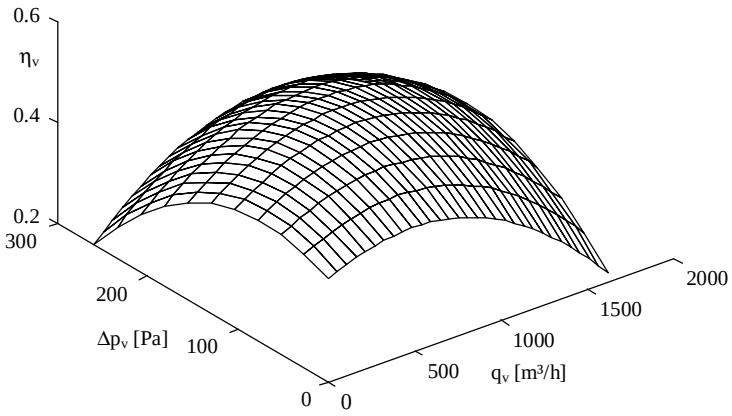

Figure 5 - Model for Evaluating Fan Efficiency

$$\Phi = \frac{4 \cdot q_{v0}}{\pi^2 \cdot D^3 \cdot n_0} \text{ and} \tag{3.12}$$

$$\Psi = \frac{2 \cdot \Delta p_{v0}}{\rho \cdot \pi^2 \cdot D^2 \cdot n_0^{\,2}} \tag{3.13}$$

with the wheel diameter D and the nominal volume flow rate q_{v0} at nominal pressure Δp_{v0} are needed. The normalized fan characteristic as a n-th degree polynom

$$\Psi = c_0 + c_1 \cdot \Phi^1 + \ldots + c_n \cdot \Phi^n \tag{3.14}$$

has to be approximated for the selected fan and must be transformed to $\Delta p_v = f(q_v, n)$. This calculation must be done for every change in fan rotation speed. The efficiency of the used fan is determined by ellipse-like iso-lines (Figure 5), which were obtained by measurements and approximation. Thus, the total power is determined by the efficiency and the fan power. Test plant measurements as shown in chapter 5 suggest a 1st order system with transport lag 1 s < τ < 3 s and a time constant 5 s < T < 10 s for the dynamic fan model.

3.5 Stationary Transmission Behaviour

The stationary behaviour of the ventilation system for normal operation including pressure differences and mass flow rates in each section can be calculated for each state of the EATD (basic ventilation or demand ventilation), n, v‘ and outdoor air temperature. The following statements assume all kitchen and bathroom EATDs on the 1st - 3rd floor in demand ventilation state with the mass flow rates $\dot{m}_{Bi,d}, \dot{m}_{Ki,d}; i = 1,2,3$. All the other kitchen and bathroom EATDs on the 4th - 6th floor are in basic ventilation state with $\dot{m}_{Bj,b}, \dot{m}_{Kj,b}; j = 4,5,6$. Figure 6(a),(b) depicts the mass flow rates for the EATDs in the bathrooms on the 1st and 6th floor. $\dot{m}_{B1,d}$ changes with n and acts like a conventional non-controlled EATD. ϑ_o and v‘ have a strong influence for low fan speed n < 600 rpm. For fan speed greater 600 rpm the volume flow control forces $\dot{m}_{B6,b}$ to constant values, which are independent from ϑ_o, v‘, n and Δp. A similar behaviour can be stated for the OATDs.

Hence, the described EATDs reduce the effect of decentral disturbances right at the location where they emerge. Furthermore, planned volume flow rates for basic ventilation can be matched without starting up adjustment of the air inlets and outlets. With these prerequisites a demand guided control of the fan becomes possible. Chapter 4 explains whether the planned values for demand ventilation can be reached or not.

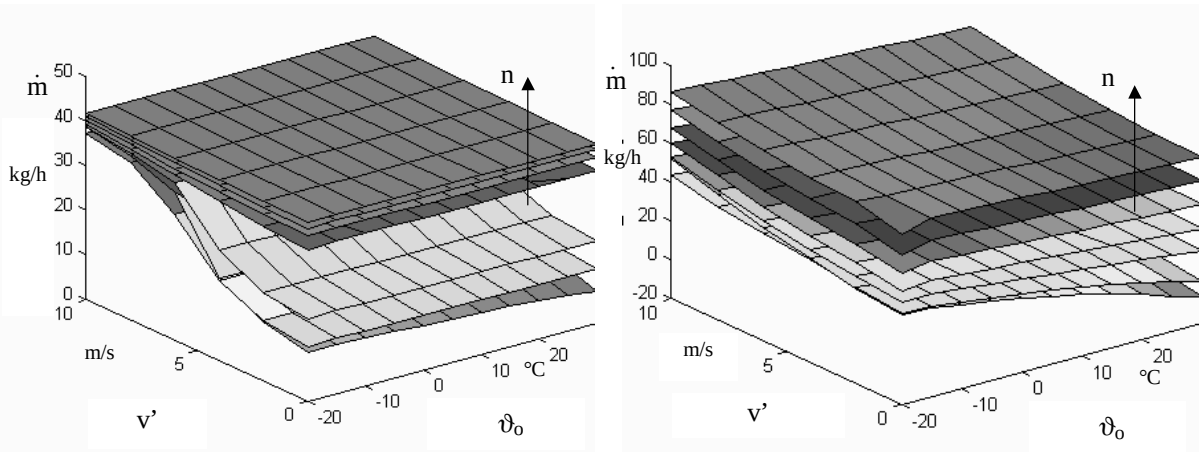

(a): $\dot{m}_{B6,b} = f(n, \vartheta_o, v')$, basic ventilation (b): $\dot{m}_{B1,d} = f(n, \vartheta_o, v')$, demand ventilation

Figure 6 - Bathroom, 1st and 6th Floor Mass Air Flow Rates through EATDs

4. DEMAND GUIDED ADAPTIVE FAN CONTROL

Fan control is usually achieved by a pressure controlled fan with $\Delta p_v = \Delta p_{v,ref}$ = constant. In practice, such a control strategy leads to a pressure setpoint much to high and consumes more energy than necessary. At 100% basic ventilation the planned volume flow rate should be

matched even under unfavourable circumstances. Especially in winter time buoyancy forced pressure deviations cause an undesired air flow change Δq_v while the energy demand remains unchanged. Furthermore, a control strategy for the central fan must consider the non-linear operation behaviour. The slope of characteristic curve changes strongly in dependence of the EATDs in demand ventilation state. The demand guided adaptive fan control, however, implements an EATD depended air flow control in an energy saving manner. In choosing appropriate set points the planned air flow rates are matched with gliding pressure changes.

4.1 Set Point Calculation

Air flow rate controlled fans are not common for residential building construction although there is almost no extra expenditure. With a nozzle based or another suitable gauge the volume flow rate q_v of the system is measured and compared with the reference value $q_{v,ref}$. Modern fan constructions already feature a nozzle for air flow rate measurement within the induction pipe.

Since the control of the EATDs is based on a field bus system, all EATD state changes between basic and demand ventilation in the kitchen or bathroom are known to the system. In combination with the planned air flow rates the total air flow rate is given by

$$q_{v,ref} = \sum_{i \in B_b} q_{Bi,b} + \sum_{i \in K_b} q_{Ki,b} + \sum_{i \in B_d} q_{Bi,d} + \sum_{i \in K_d} q_{Ki,d} \tag{4.1}$$

The total air flow rate $q_{v,b}$ for EATDs in basic ventilation state with $q_{Bi,b}, q_{Kj,b}; i \in B_b, j \in K_b$ is obtained as

$$q_{v,b} = \sum_{i \in B_b} q_{Bi,b} + \sum_{i \in K_b} q_{Ki,b} \tag{4.2}$$

and ensured by the decentralized air flow rate controllers. Hence the total air flow rate for all EATDs in a demand ventilation state with $q_{Bi,d}, q_{Kj,d}; i \in B_d, j \in K_d$ is

$$q_{v,d} = q_{v,ref} - q_{v,b} = \sum_{i \in B_d} q_{Bi,d} + \sum_{i \in K_d} q_{Ki,d} \,. \tag{4.3}$$

The simulation of the described procedure in section 4.2 as well as the measured data from a test ventilation system verify the assumption, that air flow rate deviations from the planned air flow can be neglected for the EATDs in demand ventilation state.

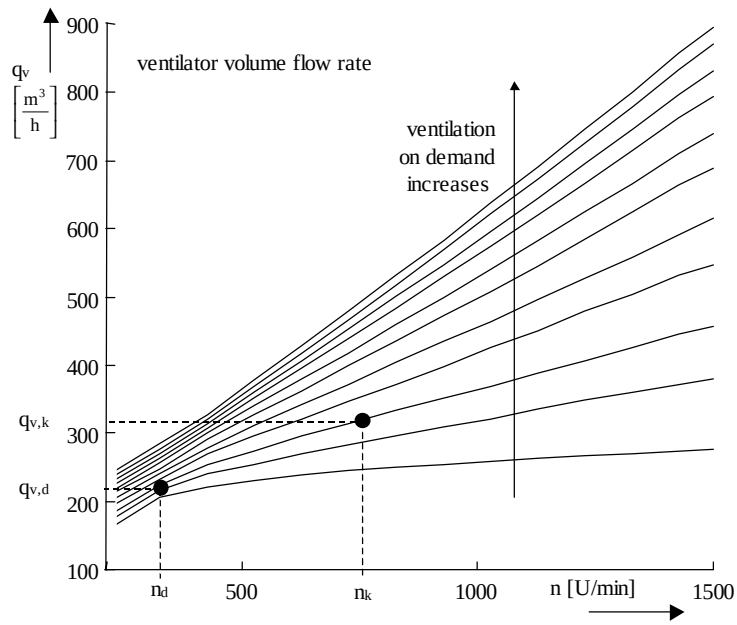

Figure 7 – Characteristic Curves $q_v=f(n,K_q)$

4.2 Adaptive Volume Flow Rate Control with Pressure Limiting

A particular gain of a ventilation system for normal operation $\Delta p_v = f(n)$ and $q_v = f(n)$ can change as much as factor 20. For a stable control changes in amplification should not exceed factor 4. Figure 7 show the calculation results $q_v = f(n)$. The approximation of the actual slope is applied to change the controller gain, achieving a constant closed loop gain. Determining the slope is based on $\{q_{v,b}, n_b\}$ for 100% basic ventilation at $\Delta p_v = f(n_b) \approx 50 - 70$ Pa. The actual plant gain is then given by

$$K_q = (q_{v,k} - q_{v,b}) / (n_k - n_b) \tag{4.4}$$

for time t_k using $\{q_{v,k}, n_k\}$. Figure 8 depicts the feedback compensation control structure. The outer feedback path limits the total pressure for the fan in order to avoid loud noise levels. Furthermore, the pressure should not exceed the maximum threshold value $\Delta p_{v,max}$ for safety reasons. The difference equation (4.6) applies to the inner and outer feedback path compensator. The outer compensator effects the entire control only for pressure values greater than $\Delta p_{v,max}$ by diminishing $q_{v,ref}$ with $q_{corr} \leq 0$.

The inner feedback path compensator is a discrete PI controller with

$$R(z) = \frac{b_1 \cdot z + b_0}{z - 1} \quad \text{with } b_1 = K_R \cdot (1 + \frac{T}{2T_I}),\ b_0 = K_R \cdot (\frac{T}{2T_I} - 1). \tag{4.5}$$

For a sample step k and a sample time T follows

$$n_k = n_{k-1} + b_1 \cdot w_{q,k} + b_0 \cdot w_{q,k-1}. \tag{4.6}$$

A desired constant closed loop gain $K_{CL} = K_R \cdot K_q$ = constant
leads to a K_R introduced in (4.5)

$$K_R = K_{CL} / K_q\ . \tag{4.7}$$

Since $q_{v,k}$ is superimposed with disturbances e_k

$$q_{v,k} = f(n_k, K_q) + e_k \tag{4.8}$$

parameter K_q must be estimated by help of regression using measured data $\{q_{v,k}, n_k\}$. The described estimation of parameters is done with the goal of determining estimated values $\hat{K}_q$ for K_q. The resulting model output

$$\hat{q}_v = f(n_k, \hat{K}_q) \tag{4.9}$$

contains estimated disturbances

$$\hat{e}_k = q_{v,k} - \hat{q}_{v,k} \tag{4.10}$$

which should become small. A linear-parameter approach is sufficient for a characteristic curve under normal conditions. Thus, the problem can be solved explicit using least square method. The linear-parameter estimation gives

$$\underline{\hat{e}} = \underline{y} - \Theta\, \underline{p} \quad \text{with } \underline{\hat{e}} = \begin{pmatrix} \vdots \\ \hat{e}_k \\ \vdots \end{pmatrix} \quad \underline{y} = \begin{pmatrix} \vdots \\ q_{v,k} \\ \vdots \end{pmatrix} \quad \Theta = \begin{pmatrix} \vdots \\ \underline{f}^T(n_k) \\ \vdots \end{pmatrix} \quad \underline{\hat{p}} = \begin{pmatrix} \vdots \\ \hat{K}_{q,k} \\ \vdots \end{pmatrix} \tag{4.11}$$

and the parameters are found explicitly using minimization

$$\underline{\hat{p}} = \min_{\underline{p}} \underline{\hat{e}}^T \underline{\hat{e}} \tag{4.12}$$

based on a quadratic quality factor. The analytic solution is

$$\underline{\hat{p}} = \left(\Theta^T\Theta\right)^{-1}\Theta^T\underline{y} = S\underline{g} \quad \text{with } S = \left(\sum_i \underline{f}(n_i)\underline{f}^T(n_i)\right)^{-1}, \quad \underline{g} = \sum_i \underline{f}(n_i)\underline{y}. \tag{4.13}$$

Hence, the linear model is

$$\hat{q}_v = \hat{q}_{vo} + \hat{K}_q n \text{ mit } \begin{pmatrix}\hat{q}_{vo}\\ \hat{K}_q\end{pmatrix} = \begin{pmatrix}\sum_{i=1}^{N} 1 & \sum_{i=1}^{N} n_i \\ \sum_{i=1}^{N} n_i & \sum_{i=1}^{N} n_i^2\end{pmatrix}^{-1}\begin{pmatrix}\sum_{i=1}^{N} q_{vi} \\ \sum_{i=1}^{N} n_i q_{vi}\end{pmatrix} \tag{4.14}$$

for N measurements. Actually the solution is found by using recursive calculation which offers the advantage of high speed and memory efficient programming for real-time control. To the model reference adaptive control (Klingner *et. al.*1999) a formal analogy applies. The stability of the system is ensured by the hyperstability theory of Popov (Unbehauen 1993).

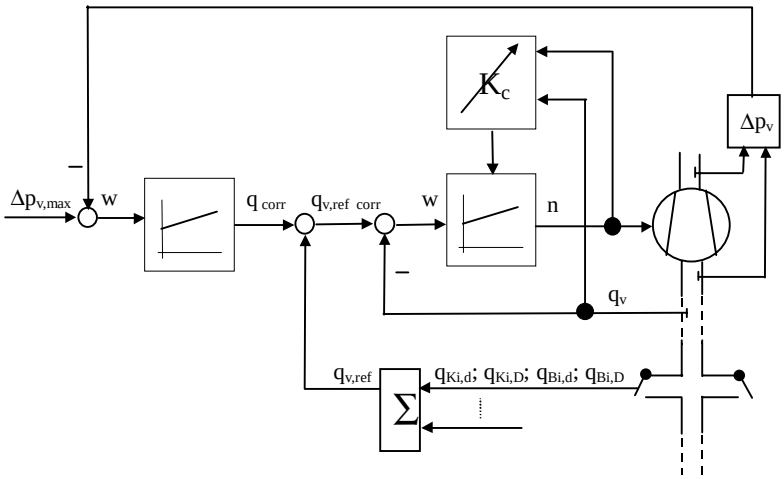

Figure 8 – Adaptive Volume Flow Rate with Pressure Limiting

4.3 Results from Simulation and Test Plant

Figure 9(a-c) shows simulation results for the described approach in comparison with a pure pressure control. Figure 9(c) also shows the specific electrical fan power

$$K_v = P_{el}/q_v \tag{4.15}$$

as well, where P_{el} is the electrical power of the fan. For the different time intervals (1)-(6) the parameters have been changed as shown in Table 1. The demand guided control of q_v is shown in Figure 9(a). The gliding reference value $q_{v,ref}$ is determined by the actual ventilation demand and influences the pressure.

Table 1. Simulation Conditions and Parameter Variations

(1)	100% basic ventilation, ϑ_o = 15 °C, v'=0 m/s
(2)	bathroom 1st floor and kitchen 3rd floor demand ventilation (17%)
(3)	(2) and bathroom 4th floor and kitchen 5th floor demand ventilation (33%)
(4)	(3) and ϑ_o = -5 °C
(5)	(4) and $0 \le v' \le 5$ m/s
(6)	(5) 100% basic ventilation, ϑ_o = -5 °C, $0 \le v' \le 5$ m/s

The 1st floor bathroom shows a well stabilized $q_{B1} \approx 20$ m^3h^{-1}. The adaptation of the closed loop gain leads to good transient-response characteristics. The pressure control in Figure 9(b) has to deal with a possible demand ventilation of 40% of all EATDs and has to match a reference pressure $\Delta p_{v,ref}$ = 120 Pa. This causes a ventilation much too high and higher energy losses

as well because of a few EATDs in demand state. Time-section (4) is distinct, however, because of buoyancy. Fan speed is reduced by the volume flow control in Figure 9(a). On the contrary, the pressure control tries to match the reference pressure and causes unnecessary volume flows. Time-section (5) and (6) show disturbed volume flow rates due to wind forces, but still the pressure is lower for the volume flow control in Figure 9(a) than it is for pressure control in Figure 9(b). Figure 9(c) compares the specific power consumption and shows that a volume flow controlled fan needs about 30% less energy than a pressure controlled fan.

The simulation results show the efficiency of the proposed approach and low deviations of volume flows from the planned values in comparison with a traditional pressure control.

The following sections confirm the capability by applying the volume flow rate control to a test plant and to a block of flats.

The results gained by simulation for the behaviour of the fan controlled ventilation system are to be confirmed with extended measurements at a test plant under field test conditions.

The measurements are comparable directly with the simulations. The average deviation from the planned volume flow is usually about ±5%, 10% maximum. A sequence of measured transfer functions of the volume flow rate control is similar to behaviour in Figure 4.3 and gives stable control for all set points with satisfying dynamics.

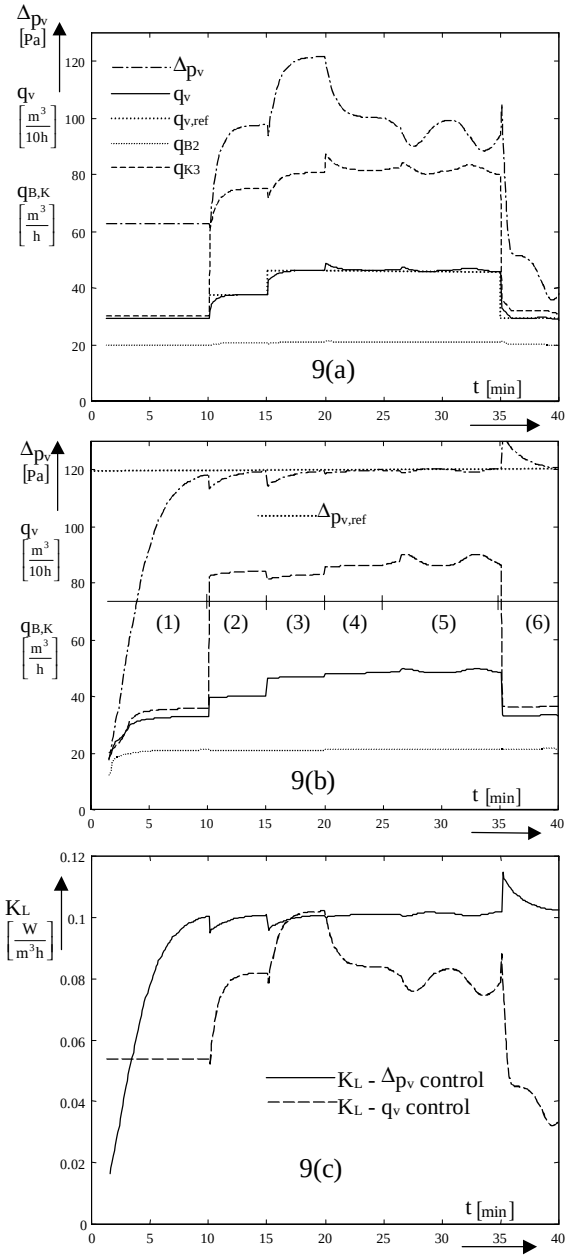

Figure 9 - Simulation Results

5. REALIZATION OF A DEMAND GUIDED HEATING AND VENTILATION SYSTEM

A commercial building automation system for single room control and heating cost calculation has been incorporated with a demand guided coordination of heating and ventilation control as shown in Figure 10. The new control strategy uses the measured data room usage pp_i={0,1,2}, window state wp_i={0,1}and EATD state b_{Bi} =0, b_{Ki} =0 for basic ventilation and b_{Bi} =1, b_{Ki} = 1 for demand ventilation and is based on a generalized air change rate control (ACRC) (Klingner *et al.* 1999) for i=1,...,n_k flats connected to air shaft k. The actual air change rate

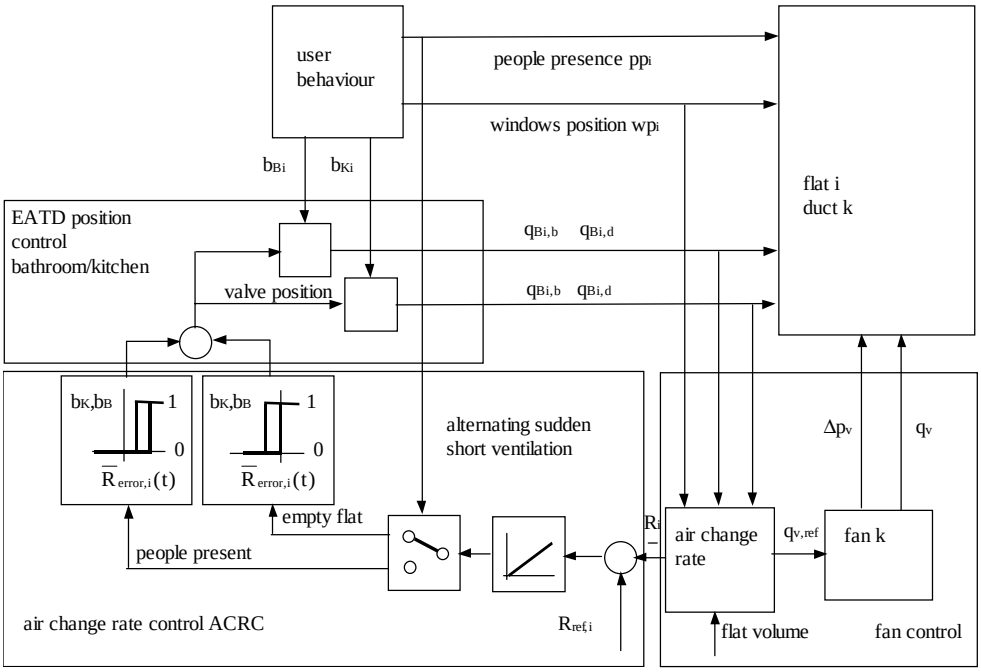

Figure 10 - Structure of the Demand Guided Heating and Ventilation Control

$$R_i(t) = q_{v,ref,i}(t)/V_i \tag{5.1}$$

is calculated by the reference values $q_{v,ref,i}$ for the volume flow control as described in equation (4.1) for each flat i. The control error $R_{ref,i}(t) - R_i(t)$ is integrated and gives mean air change rate error

$$\overline{R}_{error,i}(t) = \frac{1}{T}\int_t^{t+\Delta t}\{R_{ref,i} - R_i(t)\}dt\,. \tag{5.2}$$

This value is necessary for the calculation of $\overline{V}_i(t) = \overline{R}_{error,i}(t)\cdot\Delta t$.

According to $pp_i(t)$ $\overline{R}_{error,i}(t)$ is given to a two position controller with differential gap. If the room usage state indicates empty room, the controller will start ventilation immediately. Otherwise, a certain threshold must be reached first. Any value can be chosen for the integration interval and the threshold. From experience for a non-empty room the turn-on and turn-off thresholds

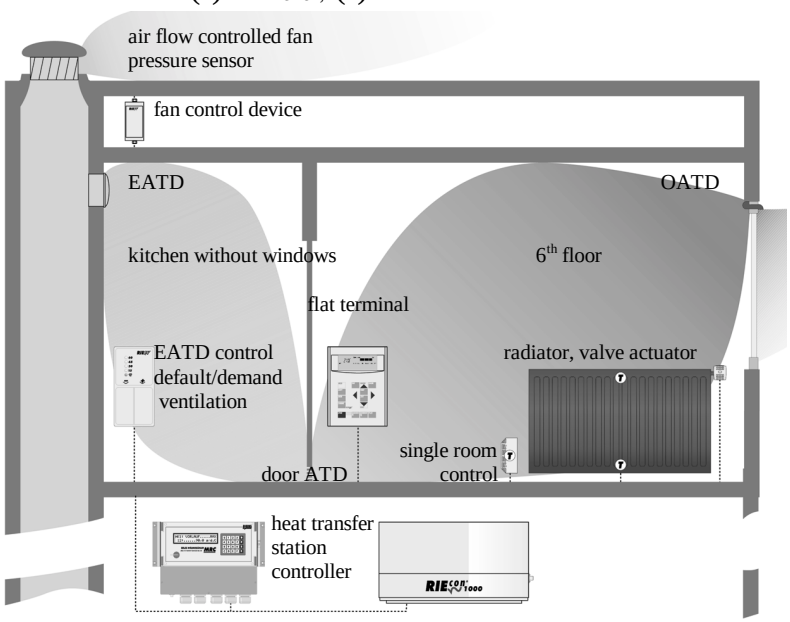

Figure 11 – Components for the Heating and Ventilation Control of the Building Automation System

$b_{Bi} = 1$, $b_{Ki} = 1$ for $\overline{R}_{error,i}(t) \geq 0{,}4h^{-1}$; $b_{Bi} = 0$, $b_{Ki} = 0$ for $\overline{R}_{error,i}(t) \leq 0{,}8h^{-1}$ (5.3)

and for an empty room

$b_{Bi} = 1$, $b_{Ki} = 1$ for $\overline{R}_{error,i}(t) \geq 0h^{-1}$; $b_{Bi} = 0$, $b_{Ki} = 0$ for $\overline{R}_{error,i}(t) \leq -0{,}5h^{-1}$ (5.4)

are advisable. A demand ventilation state is triggered by user request and in addition automatically by ACRC. The automatic ventilation tries to work when the room is empty and the heating is turned off. So the ventilation heat demand decreases.

The entire system for heating and ventilation control as shown in Figure 11 consists of a terminal for each flat and single room controllers. The terminal allows the occupant to set room usage periods and room reference temperatures for each weekday and each room individually. If a window is open, the radiator valve will close automatically. The reference volume flow rate is calculated with the ventilation demand of the connected flats. All components are connected with a proprietary field bus system, allowing the adjustment of the heat generation to the heating demand.

6. FIELD TEST FOR THE CONTROL STRATEGY IN A BLOCK OF FLATS

The building has been reconstructed from July 1999 to December 1999 and fitted with thermal insulation, new windows and a new heating system. The single room heating control has been working since October 1999. The combined heating-ventilation control started operation in January 2000.

Compared to 1998 the specific heat demand Q_h [kWh/(m^2 a)] has dropped to 40% after finished reconstruction and operation of the demand guided ACRC. A special test plan has been applied for each ventilation system and has been changed weekly. For flats with applied ACRC the energy demand of the fans and the ventilation heat demand can be compared for volume flow rate controlled fans or pressure controlled fans. Automatic ACRC or occupant dependent ventilation leads to differences in the indoor air quality and heat demand losses.

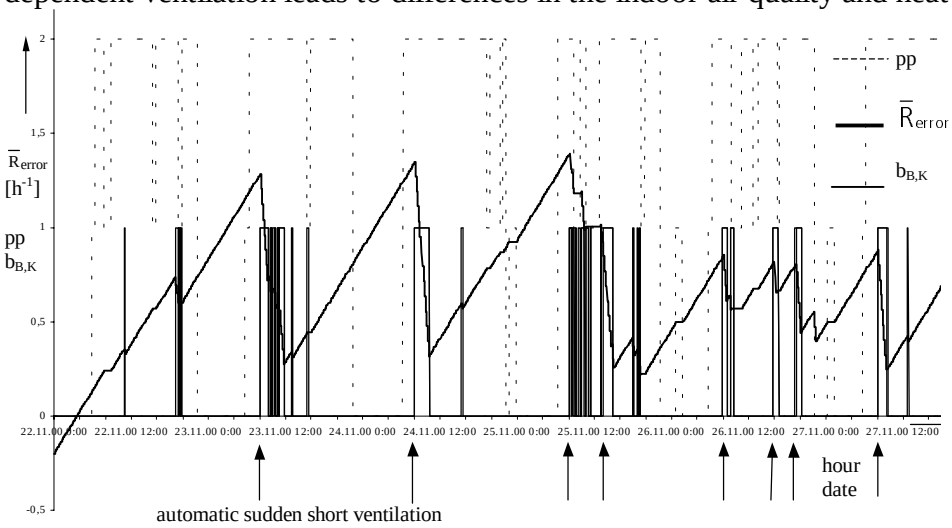

Figure 12 - ACRC for One Week

An impression of the ACRC functioning for a flat with the mean air change rate error, the room usage state and the EATD states is shown in Figure 12 for one week. An adjustable idle ACRC period from 8 pm to 6 am was applied but not drawn.

Within this period there is no demand ventilation except on occupant request. The set frequent room usage causes ACRC triggered demand ventilation mostly in times when the room is in use. That causes the parallel curves above $\overline{R}_{error} = 0$ with chosen R_{ref} =0,4 h^{-1} e.g..

The measured data can proof the influence of the occupant behaviour to the ventilation process. Approximately 29% of occupants trigger demand ventilation with almost the same $\overline{R} \approx 0{,}4h^{-1}$ for active ACRC. A small group of occupants (about 10%) uses the demand ventilation much more than necessary with $\overline{R} > 0{,}4h^{-1}$. On the contrary, about 61% of the occupants make almost no use of the demand ventilation with $\overline{R} < 0{,}4h^{-1}$. For the latter case the ACRC triggers demand ventilation and ensures a necessary air change rate. But the latter case also implies a greater ventilation heat energy demand caused by the ACRC. If there is none or almost none occupant triggered ventilation, the automatic control will increase $\overline{R}_i(t)$ until the reference value is matched.

The most relevant results for energy conservation and indoor air quality improvement are represented verbal during the conference since the measurements have not been finished yet.

7. SUMMARY

A new field bus based control strategy has been developed for coordinating single room heat control and ventilation control. The design, the rating and the automatic control of a central fan assisted exhaust air ventilation system with decentral OATDs was a necessary prerequisite for keeping the volume flow rates for each flat for both basic and demand ventilation within the given limits. The fan control together with the EATD and OATD were optimized for energy conservation, which includes the utilization of buoyancy. The demand guided adaptive fan volume flow control gets data about the ventilation demand in the individual flats and adopts to the changing characteristic curve of the system.

A developed Matlab/Simulink simulation model demonstrates the behaviour of the system in terms of the steady state air flow through the building and the dynamic behaviour of the controlled fan. The match of planned volume flow rates and the low energy demand of the fan has been confirmed at a test plant as well as at a block of flats with 65 units. The coordination of single room control and ventilation process control leads to an air change rate in compliance with health and legal considerations.

The control strategy has been successfully implemented into a commercial building automation system. The project is supported by the German Bundesministerium für Wirtschaft und Technologie, grant number 0329750D.

8. NOMENCLATURE

a	- joint conductance coefficient
a_i, b_i, c_i	- parameter sets
e	- error signal
g	- gravitational force per unit mass
K	- resistance coefficient, gain
K_v	- specific electrical fan power
$\dot{m}$	- mass flow rate
n	- fan speed
n_{50}	- leakage rate at 50 Pa per unit volume
P	- power
p	- pressure
ϑ	- temperature
ρ	- air density
Q	- heat demand
q	- volume flow rate
q_{50}	- specific leakage rate at 50 Pa per flat area
R	- air change rate
T	- time constant
t	- time
v	- air velocity
V	- volume
w	- control error

Subscripts

A - buoyancy
b - basic
B - bathroom, set of room numbers
d - demand, door, dynamic
i - internal, inside
J - joint
K - kitchen, set of room numbers
V - ventilation, specific
O - outlet
o - outdoor, overpressure
ref - reference value
S - shaft, duct
s - subpressure
st - static
T - transmission, specific
v - fan

9. REFERENCES

BRL 1988. Bauaufsichtliche Richtlinie über die Lüftung fensterloser Küchen, Bäder und Toilettenräume in Wohnungen. Entwurf Musterrichtlinie, Bonn.

Dietze, L. 1987. Freie Lüftung von Industriegebäuden. VEB Verlag für Bauwesen, Berlin.

DIN 1946-6, 1998. Raumlufttecchnik (VDI-Lüftungsregeln). Teil 6: Lüftung von Wohnungen.

DIN 4701, 1995. Regeln für die Berechnung der Heizlast von Gebäuden.

DIN V 24 194–2, 1985. Kanalbauteile für lufttechnische Anlagen; Dichtheit. Dichtheitsklassen von Luftkanalsystemen. Bonn.

Dittmann, A. 1995. Repetitorium der technischen Thermodynamik. B.G.Teubner Stuttgart.

EN 13 829, 2000. Wärmetechnisches Verhalten von Gebäuden – Bestimmung der Luftdurchlässigkeit von Gebäuden – Differenzdruckverfahren. Bonn.

EnEV 1999. Verordnung über energiesparenden Wärmeschutz und energiesparende Anlagentechnik bei Gebäuden. Referentenentwurf, Bonn.

Etheridge, D. and Sandberg, M. 1996. Building Ventilation. John Wiley & Sons Ltd, Chichester.

Feustel, H. 1984. Beitrag zur theoretischen Beschreibung der Druck- und Luftmassestromverteilung in natürlich und maschinell belüfteten Gebäuden. *VDI Fortschrittberichte*, Vol. 6, No. 151

Heinz, E. 1995. Sanierung raumlufttechnischer Anlagen. Forschungsbericht, IEMB, Berlin.

Heinz, E. 2000. Kontrollierte Wohnungslüftung. Verlag Bauwesen, Berlin.

Krüger, H.-D., Heinz, E. 1996. Meßbedingungen und Kennzahlen zur Überwachung und Bilanzierung des Energieverbrauches einschließlich der CO_2-Emission von raumlufttechnischen Anlagen für die Wohnungslüftung. Report, IEMB, Berlin.

Klingner, M., Knabe, G., Lauckner, G., Werdin, W. and Billerbeck, G. 1999. Bedarfsgerechte Regelung des Raumluftzustandes in Wohngebäuden. *Heizung, Lüftung/Klima, Haustechnik*. Springer VDI Verlag, Vol. 50, No. 1, pp. 46 – 55; No. 2, pp. 27 – 33.

Knabe, G., Werdin, H., Klingner, M. and Lauckner, G. 1997. Demand Guided Control of the Indoor Air Quality in Domestic Buildings. Clima 2000 Conference, paper 216, Brussels.

Matlab 2000. Matlab - User's Guide. The MathWorks, Inc., Natick, Mass.

Recknagel, H., Sprenger, E. and Schramek, E. 2000. Taschenbuch für Heizung und Klimatechnik. R. Oldenbourg Verlag. München.

Reichel, D. and Richter, W. 1998. Luftdichtheit von industriell errichteten Wohngebäuden in den neuen Bundesländern. Report, TU Dresden.

Reichel, D. and Richter, W. 1996. Wirksamkeit von Lüftungsgeräten. Zuluftversorgung von Wohnungen mit dezentralen Lüftungseinrichtungen. *Bauforschung für die Praxis*, Vol. 33, IRB Verlag, Stuttgart.

Richter, W. 1983. Lüftung im Wohnungsbau. VEB Verlag für Bauwesen, Berlin.

Unbehauen, H. 1993. Regelungstechnik. Vieweg & Sohn, Braunschweig.

WSchV 1995. Verordnung über energiesparenden Wärmeschutz bei Gebäuden. Bonn.